HYDROKOMP®
Hydraulische Komponenten GmbH
25 JAHRE 1998 - 2023

Technology that connects

Coupling Systems

up to 200 °C

Hydraulic

Pneumatic

Vacuum

Water/Coolant

Media and fluid transfer made easy!

Coupling elements

Nominal diameter:	3, 5, 8 and 12
Operating pressure:	pmax. 250 - 500 bar
Operating temperature:	Standard 90ºC
	HT 200ºC
Design:	built-in and threaded body elements
Operating method:	for pressurized or depressurized coupling
Medium:	fluid or gaseous media or vaccum
Material:	particularly stainless steel
Product range:	standard elements and special designs
Advantages:	- space-saving installation in individual
	- mounting housings is possible
	- replaceable system seal

Data sheet: 100-3 **Webcode:** 010003

Description:

Coupling elements are used to prevent leakage when transmitting fluid or gaseous media or vaccum. The coupling elements are special compact parts, which can be installed directly into a mounting housing.

The system seal (axial seal) between coupling mechanism and coupling nipple acts axially. It is placed in the coupling mechanism. This design makes it possible to have position tolerances.

Depending on the sealing material the coupling elements are designed for pressurized or depressurized coupling processes.

The built-in elements are particularly suitable for the installation in plates of multiple coupling systems. Threaded body elements can be directly screwed into the fixture body, for example of a tool change system. There, they are ideal suitable as an interface for media transfer.

Advantages:

- **Space-saving installation in individual receiving housing possible**
- **Transmission of liquid and gaseous mediums and vacuum**
- **Vacuum for ND3 and ND5 (ND8 and ND12 on request)**
- **Pressurized or depressurized coupling**
- **HT-Variant up to 200°C** *New!*
- **Special variants on request:**
  - **reduced spring force**
  - **reduced coupling stroke** *Special!*
  - **including cleaning nozzle**
  - **pressure relief valve included**
  - **suitable for usage with steam**

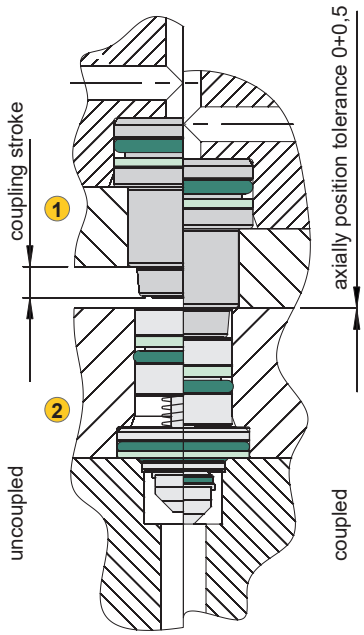

1 Coupling nipple
2 Coupling mechanism

Operating conditions:

Coupling nipple and coupling mechanism must face coaxially each other before the coupling process is initiated.
The base plates of both elements must be guided about 2 to 3 mm before contact of the sealing surfaces within the radial position tolerance.

The coupling force between coupling nipple and coupling mechanism resulting from hydraulic pressure according to the formula has to be compensated positively from the outside.

The axially acting front seal areas must be protected from contamination. Good results can be archieved by rinsing and following blowing-off with compressed air.

The sealing of the mechanism is done in the bore base of the mounting hole. The required surface quality in the drawing on data sheet 100-3 has to be kept.

Technical data:

Nominal diameter:	3	5	8	12
Operating pressure max. [bar]	350	500	300	250
Flow max./minute [l]	8	12	25	50
Operating temperature 90°C		Order-Nr. Standard		
Operating temperature 200°C		Order-Nr. additional „-HT“		
Coupling stroke [mm]	4,5	4,5	7,0	10,0
Coupling force min. at 0 bar [N]	94	98	98	169
Axial coupling force pressurized per coupling position	F[N]=9,4x**p**[bar]	F[N]=15,4x**p**[bar]	F[N]=31,4x**p**[bar]	F[N]=70,7x**p**[bar]
Axial positioning tolerance [mm]	+ 0,5	+ 0,5	+ 0,5	+ 0,5
Radial positioning tolerance [mm]	± 0,3	± 0,3	± 0,3	± 0,5
Permitted angle tolerance	± 1°	± 1°	± 1°	± 1°

HT-Version up to 200°C

Additional technical data and dimensional drawings of the coupling elements can be found on the data sheet 100-3.

For the HT-Version 200ºC add "-HT" to the order number.
For example:
KM-460-5-EG008-**HT.**

ND 3

Coupling element	Operating method	Design	Thread	Order number
Coupling mechanism	depressurized coupling	built-in	none	**KM-3-N001**
		threaded body	M20x1,5	**KM-3-EG001**
	pressurized coupling	built-in	none	**KM-3-N002**
		threaded body	M20x1,5	**KM-3-EG002**
Coupling nipple	depressurized coupling	built-in	none	**KN-3-S001K**
		threaded body	M20x1,5	**KN-3-EG001**
	pressurized coupling	built-in	none	**KN-3-S002K**
		threaded body	M20x1,5	**KN-3-EG002**

ND 5

Coupling element	Operating method	Design	Thread	Order number
Coupling mechanism	depressurized coupling	built-in	none	**KM-460-5-N001**
		threaded body	M24x1,5	**KM-460-5-EG008**
		threaded body	M30x1,5	**KM-460-5-EG001**
	pressurized coupling	built-in	none	**KM-460-5-N002**
		threaded body	M24x1,5	**KM-460-5-EG002**
		threaded body	M30x1,5	**KM-460-5-EG003**
Coupling nipple	depressurized coupling	built-in	none	**KN-460-5-S001K**
		built-in	none	**KN-460-5-S001L**
		threaded body	M24x1,5	**KN-460-5-EG003**
		threaded body	M28x1,0	**KN-460-5-EG004**
		threaded body	M28x1,0[1]	**KN-460-5-EG006**
	pressurized coupling	built-in	none	**KN-460-5-S003K**
		built-in	none	**KN-460-5-S003L**
		threaded body	M24x1,5	**KN-460-5-EG002**
		threaded body	M28x1,0	**KN-460-5-EG001**

[1]This coupling nipple has a pressure relief function in the uncoupled state. It may only be installed into the tank line.
There, the pressure relief function prevents a pressure rise at any faulty piston seals. The opening pressure is approx. 3 - 5 bar.

ND 8

Coupling element	Operating method	Design	Thread	Order number
Coupling mechanism	depressurized coupling	built-in	none	**KM-460-8-N001**
		threaded body	M36x1,5	**KM-460-8-EG001**
	pressurized coupling	built-in	none	**KM-460-8-N002**
		threaded body	M36x1,5	**KM-460-8-EG002**
Coupling nipple	depressurized coupling	built-in	none	**KN-460-8-S001**
		threaded body	M30x1,5	**KN-460-8-EG001**
	pressurized coupling	built-in	none	**KN-460-8-S002**
		threaded body	M30x1,5	**KN-460-8-EG002**

ND12

Coupling element	Operating method	Design	Thread	Order number
Coupling mechanism	depressurized coupling	built-in	none	**KM-12-N001**
		threaded body	M45x1,5	**KM-12-EG001**
	pressurized coupling	built-in	none	**KM-12-N002**
		threaded body	M45x1,5	**KM-12-EG002**
Coupling nipple	depressurized coupling	built-in	none	**KN-12-S001**
		threaded body	M45x1,5	**KN-12-EG001**
	pressurized coupling	built-in	none	**KN-12-S002**
		threaded body	M45x1,5	**KN-12-EG002**

Double-acting coupling nipple unit with 13 cm³ hydraulic accumulator (l.), coupling mechanism board (r.) and safety holder for coupling mechanism board with proximity switch (b.).

Manual coupling systems

Nominal diameter:	5
Operating pressure:	pmax. 500 bar
Design:	clamping unit with levers or ball valve
Operating method:	single-acting or double-acting
Oil supply:	manifold or G1/4 threaded port connection
Hydr. accumulator:	13 cm³ or 40 cm³
Product range:	standard systems and special designs
Advantages:	- integrated safety elements
	- no mixing up of pressure line and tank line
	- system pressure remains during coupling
	- oil supply without pipes possible

Data sheet: 100-2 Webcode: 010002

Description:

Manual coupling systems are applied with machine tools that operate with hydraulic fixtures but do not have a standard equipment of a hydraulic interface for oil supply to the fixture pallet.

The operating personnel take care of coupling and decoupling. In contrast to quicklocking couplings, manual couplings do not bear the danger of mixing up pressure line and tank line. Also, the coupling process is made much faster.

After clamping the workpiece it is easy to unclamp the system without effort by the use of a hydraulically piloted check valve. Also the system pressure remains.

Required safety elements are already integrated. These include one hydraulic accumulator, one check valve and one pressure relief valve, which protects the hydraulic accumulator from a pressure rise over 10%.

As standard the manual coupling systems are equipped with manifold and G1/4 threaded ports for oil supply.

All flange-on surfaces have O-ring counterbores on the bottom and on the rear side, that also allows oil supply without pipes through drilled channels.

A safety holder with an inductive proximity switch is optionally available for the double-acting coupling system. The safety holder keeps the coupling mechanism board in the decoupled state into a parking station.

Through the integrated proximity switch the safety holder can be directly connected with the machine control. With that, the pallet transport is only permitted in decoupled state.

With the help of an equalizer valve in the coupling nipple of the T-port the pressure rise is limited to about 5 bar in decoupled state, e. g. when a leakage in the system occurs.

Coupling nipple unit

MKN

Example

Oil supply via manifold or G1/4 threaded port connection.

Integrated hydraulic accumulator with volume nominal 13 cm³ or 40 cm³.

With integrated check valve and pressure relief valve

Coupling mechanism board

MKM

Example

Coupling mechanism board with levers, it is used to lock the coupling nipple unit for pressure transfer.

Allows quick and easy coupling by the user.

Safety holder

MKS

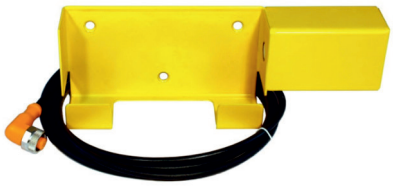

Example

Safety holder with inductive proximity switch and plug (cable length 3 m).

The safety holder takes up the uncoupled coupling board into a parking station.

Order numbers:

MKN

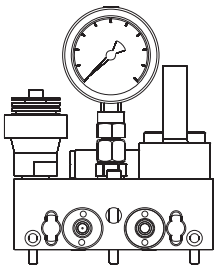

System component	Special feature	Order number
Coupling nipple unit	Flange bottom-side	**MKN-460-5-011**
	Flange bottom-side	**MKN-460-5-009**
	Flange rear-side	**MKN-460-5-013**
	Flange rear-side	**MKN-460-5-015**
	G1/4 threaded port	**MKN-460-5-012**
	G1/4 threaded port	**MKN-460-5-014**
O-ring 16x2	Spare part, material FKM, for manifold con.	**6020-001**
Pressure gauge	Spare part, 0 - 600 bar	**8200-000**
Pressure relief valve	Spare part, opening pressure 425 bar	**8000-003**
Check valve	Spare part, hydraulic, pilot operated	**ERSV-500-5-003**
Coupling nipple ND 5	Spare part, depressurized coupling	**KN-460-5-EG004**
Coupling nipple ND 5	Spare part, with pressure relief function	**KN-460-5-EG006**
Hydraulic accumulator 13 cm³	Spare part	**8200-001**
Hydraulic accumulator 40 cm³	Spare part	**8200-002**

MKM

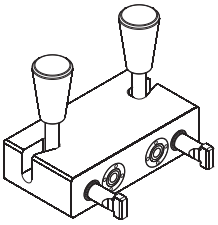

System component	Special feature	Order number
Coupling mechanism board	with levers	**MKM-460-5-100**
Coupling mechanism	Spare part, ND 5	**KM-460-5-EG008**
System seal	Spare part, red (packaging unit 10 pcs.)	**D-460-5-001**

MKS

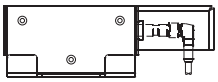

System component	Special feature	Order number
Safety holder	Complete set	**MKS-5-001**
Plug	Spare part, with 3 m cable	**8500-032**
Inductive proximity switch	Spare part	**8500-031**
holder frame	Spare part	**9000-101**

MK

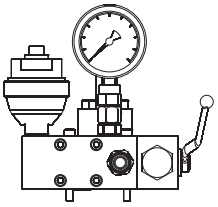

System component	Special feature	Order number
Coupling unit with ball valve	Flange bottom-side	**MK-5-001**
Coupling unit with ball valve	Flange bottom-side	**MK-5-002**
Pressure relief valve	Spare part, opening pressure 425 bar	**8000-003**
Flat face plug	Spare part, with dust cover	**8100-019**
Hydraulic accumulator 13 cm³	Spare part	**8200-001**
Hydraulic accumulator 40 cm³	Spare part	**8200-002**
Ball valve	Spare part	**8100-018**
Pressure gauge, 0 - 600 bar	Spare part, 0 - 600 bar	**8200-000**
Coupling sleeve	Spare part, with G1/4 threaded port	**8100-027**
O-ring 16 x 2	Spare part, material FKM, for manifold con.	**6020-001**
O-ring	Spare part, for flange bottom-side	**6014-002**
U-seal	Spare part	**6006-003**
Screw plug G1/4	Spare part	**7900-001**
Screw plug M6x60	Spare part, according to DIN 912	**7006-022**

MK

Manual coupling unit with ball valve

The coupling unit with ball valve can be connected optionally at factory by flange-bottom, flange-rear or rear threaded port.
The coupling mechanism board MKM and the safety holder MKS are not required for this coupling system.

Additional technical data and dimensional drawings of the manual coupling systems can be found in the data sheet 100-2.

Multiple coupling systems

Nominal diameter:	3, 5, 8 and 12
Operating pressure:	pmax. 250 - 500 bar
Design:	for customer-specific requirements
Operating method:	pressurized or depressurized coupling
Medium:	fluid or gaseous media or vaccum
Material:	coupling elements made of stainless steel
Product range:	standard systems and special designs
Advantages:	- combinable with different coupling elements
	- can be combined with rotary couplings
	- additional functions can be integrated
	- designs acc. to customer's requirements
	- self-locking
Data sheet: 100-4	Webcode: 010004

Description:

Multiple coupling systems are predominantly used in machine tools, where they serve as the interface for media transfer between the fixture pallet and the loading and unloading station, or the machining station.

Applications have been successfully carried out in other areas of engineering, such as handling technology, robotics and in the construction of moulds and dies.

The design of the coupling systems is based on the plug-in coupling elements (see pages 2 and 3). These are integrated into a common plate in a very compact and functional manner.

Depending on the design, various additional functions can be integrated into the coupling plates.

The spring-loaded blast nozzle built into the coupling mechanism plate can be designed in such a way, that the jet of air in the coupled state can, for example, be passed on for system monitoring of the workpieces.

In order to avoid the clamping of the fixture pallet and the associated absorption of coupling forces, the coupling systems can be equipped with a self-locking system, that saves expensive clamping elements in the operating station.

The coupling elements can be coupled either only when depressurized or when pressurized up to maximum operating pressure, whichever is chosen.

If systems are used that can be coupled under pressure, it is, for example, possible to effect a pressure change to the clamping pressure during machining, which is not possible when pilot-controlled check valves are used in the clamping line.

HYDROKOMP designs also single coupling systems. The example shows a KMP (Coupling mechanism plate) with a coupling mechanism DN 5 for depressurized coupling. The KMP is equipped with a cleaning nozzle.

We show more application examples on the pages 7 and 8.

General Technical data:

Nominal diameter:		3	5	8	12
Operating pressure max.	[bar]	350	500	300	250
Flow max./minute	[l]	8	12	25	50
Coupling stroke	[mm]	4,5	4,5	7,0	10,0
Coupling force min. at 0 bar	[N]	94	98	98	169
Coupling force axially, pressurized each coupling position		**F**[N]=9,4x**p**[bar]	**F**[N]=15,4x**p**[bar]	**F**[N]=31,4x**p**[bar]	**F**[N]=70,7x**p**[bar]
Position tolerance axially	[mm]	+ 0,5	+ 0,5	+ 0,5	+ 0,5
Position tolerance radially	[mm]	± 0,3	± 0,3	± 0,3	± 0,5
Permitted angle tolerance		± 1°	± 1°	± 1°	± 1°

Additional information about the multiple coupling systems can be found in the data sheet 100-4.

Coupling system with cleaning nozzle

Single coupling system with cleaning nozzle, (DN 5) depressurized coupling, housing according to customer's demands

l. Coupling nipple plate:
coupling nipple threaded body type

r. Coupling mechanism plate with cleaning nozzle: coupling mechanism built-in type

Single coupling system

Single coupling system, (DN 3) depressurized coupling, housing according to customer's demands

l. Coupling mechanism plate:
coupling mechanism threaded body type

r. Coupling nipple plate:
coupling nipple threaded body type

Single coupling system, G1/2 threaded port

Single coupling system, (DN 8) with threaded port G1/2, depressurized coupling, housing according to customer's demands

l. Coupling nipple plate:
coupling nipple, built-in type

r. Coupling mechanism plate:
coupling mechanism, built-in type

Innovative docking system for a pallet changing system and other changing systems:

Saves components and costs

Rotary valve coupling system (KDS) [Kupplungs Drehdurchführungssystem] is the name of HYDROKOMP's innovative docking system. Our designers found a way to clamp pallets in the loading and unloading station by the combined rotary valve coupling station instead of clamping them through hydraulically pressurized clamping cones.

This innovative docking system allows machine tool manufacturers and other machine builders to implement cheaper changing systems for workpiece pallets for example, with unchanged safe clamping.

Our customers like DMG, Heckert, Heller, MAG and Makino had asked us for possible savings with pallet changing systems.

Our engineers developed the innovative docking system. In the loading and unloading station it allows a detachable connection with hydraulically operated bolt locks. The bolts connect the lower coupling system, which is fixed in the station, with a form-fit to the coupling nipple plate, which is fixed in the palette. The rotary coupling of the KDS allows to rotate the palette by 360° during inserting and removing the workpiece.

The clamping cones including their hydraulic supply are now completely omitted in the loading and unloading station. This results in a significant reduction of costs – being the multiple of the additional KDS expense compared to the common rotary coupling. This coupling principle can be used for changing tools, grippers or even other machine components, like for example stamping robots.

As the coupling mechanism plate can be contaminated during the chipping operation in the loading and unloading station, a specially designed blow nozzle is integrated. It is set centrically and connected to the compressed air supply.

In order to ensure universal application, the conduit elements are made of stainless steel. That means they can also convey aggressive coolants and gases. Up to 16 guiding ducts are conventional.

As standard, the KDS is designed for pallets up to size 1,600 x 1,600 mm.

The system pressure can be up to 200 bar. Depending on the application conditions, the rotary coupling systems can be chosen for a conveyance of 8 to 50 l/min. Depending on the design, the diameters of the KDS are 40 to 200 mm.

KDS and coupling plates

Machining table

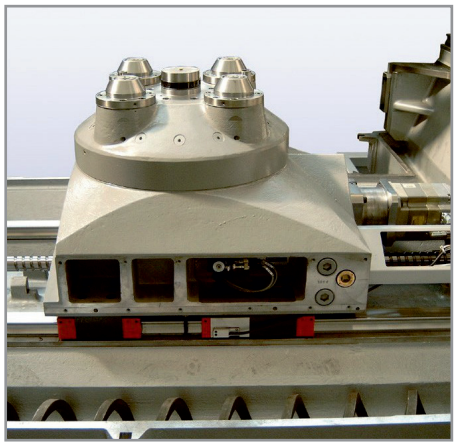

Loading and unloading station

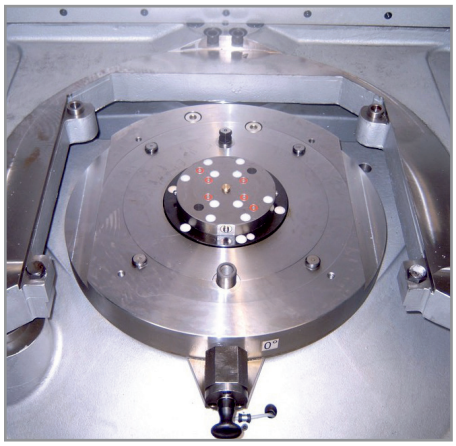

Combined rotary coupling system

Combined rotary coupling system for a machine tool with four-fold coupling interface and integrated six-fold rotary coupling

l. Coupling mechanism plate, depressurized coupling

r. Coupling nipple plate with blast nozzle and integrated rotary coupling with hydro-mechanical locking

Docking station with six coupling points

Docking station with six coupling points, pressurized coupling; in order to dock the coupling plate, it is raised by an integrated hydraulic cylinder. An electronic sensor queries the position.

The positioning of the counter-couplings is executed by two bolts.

Docking station with six coupling points

Twelve-fold coupling mechanism plate with centering bolt, depressurized coupling, special design according to customer's requirements

Six-fold coupling system

Six-fold coupling system with self-locking, two pairs of lines are each pressurized double-acting and two lines are used for pneumatics. The fixture pallet does not have to be clamped in the loading station in order to absorb the coupling forces. For this purpose, the system has the self-locking function.

Coupling plate for oil transmission

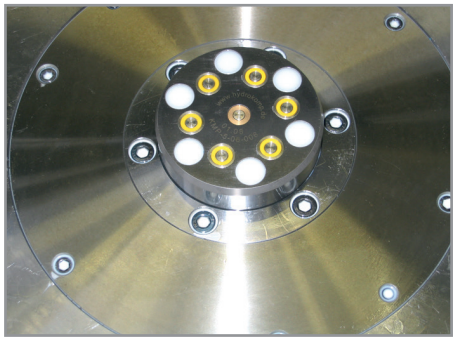

Coupling plate used for the transfer of hydraulic oil in the loading and unloading station of a fixture plate. The six coupling elements are coupled pressurized.

Tool changing modules of a robot

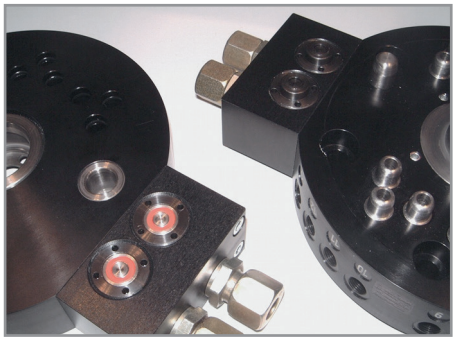

Coupling system for extrem low leackage hydraulic oil fed in tool changing modules of a robot, for that two hydraulic lines are coupled by threaded body coupling elements (M24x1,5).

Triple coupling system

Triple coupling system for hydraulic oil fed of the fixture plate in a machine tool. The connection in the loading and unloading station is executed through the lowering of the fixture plate.

Coupling nipple plate

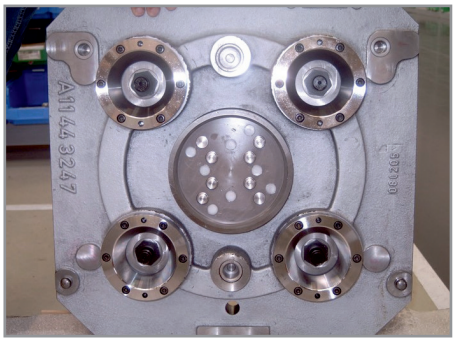

Coupling nipple plate in the fixture plate of a machine tool. The nipple plate is docked to the docking unit (figure above) and hydro-mechanical locked.

Tool-change system

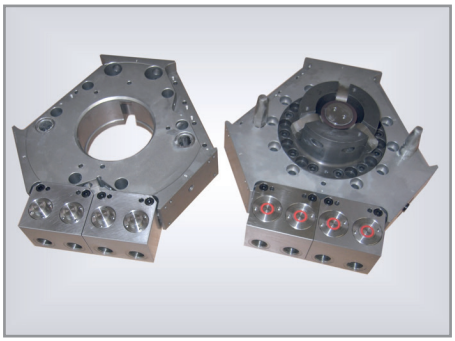

Tool-change system for a handling unit in a robot with four coupling elements (DN 8) that works as the interface for a hydraulically operated cutting tool.

Automatic coupling systems

Nominal diameter:	5 and 8
Operating pressure:	hydraulic pmax. 350/300 bar
	pneumatic 3,5 to 10 bar
Design:	built-in and threaded body elements
Operating method:	depressurized coupling / pressurized coupling
Medium:	hydraulic oil/compressed air
Material:	coupling elements made of stainless steel
Product range:	standard elements and special designs
Advantages:	- selective control of individual ports
	- no additional coupling stroke required

Data sheet: 100-6 **Webcode:** 010006

Description:

If there is no coupling stroke required or possible, this coupling system can be coupled separately by a control pressure.

The gap between the coupling mechanism and coupling nipple can be 0.6 - 1.0 mm.

Operating:

The coupling surfaces of AKN and AKM are frontally flat so that the user can positioning them in any axial and / or radial positions for coupling in accordance with the positioning tolerance.

An integrated control piston **A** initiates the clamping stroke. It is possible to control individual couplings specifically. The control pressure **A** is to be supplied with the same pressure as the media pressure **P**.

When the control port A is not pressurized, the AKM is set into the basic position. The maximum operating pressure is 350 bar.

The AKM can be operated single-acting (only hydraulic version) or doubleacting. If the AKM should operate single-acting, the port **B** must be used for housing ventilation. In order to increase the operational safety, the double-acting operation method is preferable.

1. Positioning the coupling nipple to the coupling mechanism in accordance with the positioning tolerance
2. Control pressure **A**: the connection to the coupling nipple side is initiated.
3. Operating pressure at port **P**

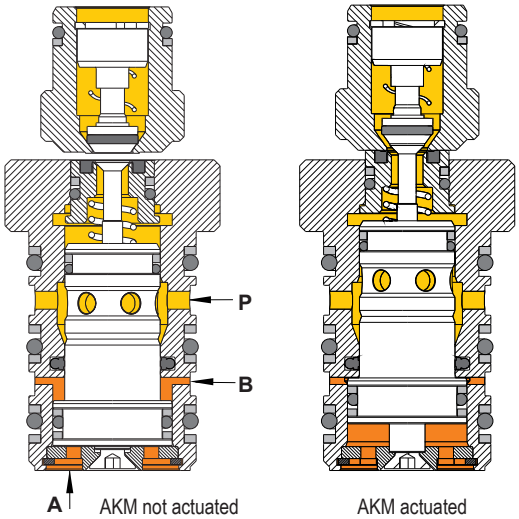

Technical data hydraulic:

Nominal diameter:		5	8
Hydraulic operating pressure max.	[bar]	350	300
Flow max./minute	[l/min.]	12	25
Gap nipple/mechanism min.	[mm]	0,6	0,6
Gap nipple/mechanism max.	[mm]	1,0	1,0
Axial coupling force (Pressure spring) coupled	[N]	130	-
Axial coupling force pressurized	[N]	F[N]=15,4 x p[bar]	F[N]=31,4 x p[bar]
Radial positioning tolerance	[mm]	± 0,2	± 0,2

Technical data pneumatic:

Nominal diameter:		5	8 (on request)
Pneumatic operating pressure min./max.	[bar]	3,5 to 10	-
Flow max./minute	[l/min.]	-	-
Gap nipple/mechanism min.	[mm]	0,6	0,6
Gap nipple/mechanism max.	[mm]	1,0	1,0
Axial coupling force (Pressure spring) coupled	[N]	45	-
Axial coupling force pressurized	[N]	F[N]=15,4 x p[bar]	F[N]=31,4 x p[bar]
Radial positioning tolerance	[mm]	± 0,2	± 0,2

Winner of the EMO Award 2013

Most innovative product in clamping technology

Additional technical data and dimensional drawings of the automatic coupling systems can be found on the data sheet 100-6.

Order numbers:

Screw-in

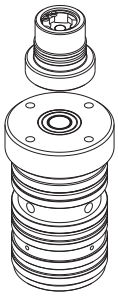

Screw-in system
A = Coupling nipple
B = Coupling mechanism

System component	Order number: ND 5	ND 8
Coupling nipple hydraulic (AKN) depressurized coupling	AKN-5-EG001	AKN-8-EG001
Coupling mechanism hydraulic (AKM) depressurized coupling	AKM-5-01-DW-001	AKM-8-01-DW-001
Coupling mechanism (AKM) depressurized coupling, without housing (only available on request)	AKM-5-01-DW-003	AKM-8-01-DW-003
Coupling nipple hydraulic (AKN) pressurized coupling	AKN-5-EG004	AKN-8-EG002
Coupling mechanism hydraulic (AKM) pressurized coupling	AKM-5-01-DW-004	AKM-8-01-DW-004
Coupling mechanism (AKM) pressurized coupling, without housing (only available on request)	AKM-5-01-DW-006	AKM-8-01-DW-006
Coupling nipple pneumatic (AKN) depressurized or pressurized coupling	AKN-5-EG005	-
Coupling mechanism pneumatic (AKM) depressurized or pressurized coupling	AKM-5-01-DW-010	-
Coupling mechanism (AKM) depressurized or pressurized coupling, without housing (only available on request)	AKM-5-01-DW-011	-
Screw-in tool for AKN	9000-199	on request
Screw-in tool for AKM	9000-198	on request

Plug-in

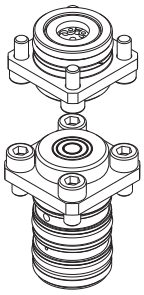

Plug-in system
A = Coupling nipple
B = Coupling mechanism

System component	Order number: ND 5	ND 8
Coupling nipple hydraulic (AKN) depressurized coupling	AKN-5-S001	AKN-8-S001
Coupling mechanism hydraulic (AKM) depressurized coupling	AKM-5-01-DW-002	AKM-8-01-DW-002
Coupling nipple hydraulic (AKN) pressurized coupling	AKN-5-S004	AKN-8-S002
Coupling mechanism hydraulic (AKM) pressurized coupling	AKM-5-01-DW-005	AKM-8-01-DW-005
Coupling nipple pneumatic (AKN) depressurized or pressurized coupling	AKN-5-S003	-
Coupling mechanism pneumatic (AKM) depressurized or pressurized coupling	AKM-5-01-DW-012	-

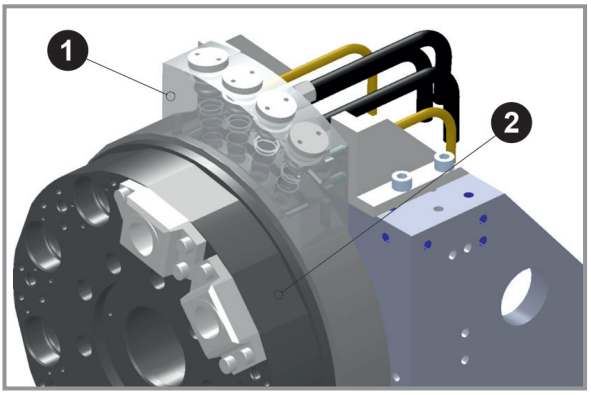

Application example:

Tool changer

Revolver fixture for nine tools each with 4 automatic coupling systems (AKM)

Actuation:
- by a common control port

Operating method:
- single-acting
(1) Receiving block with AKM
(2) Coupling nipples AKN in the revolver fixture

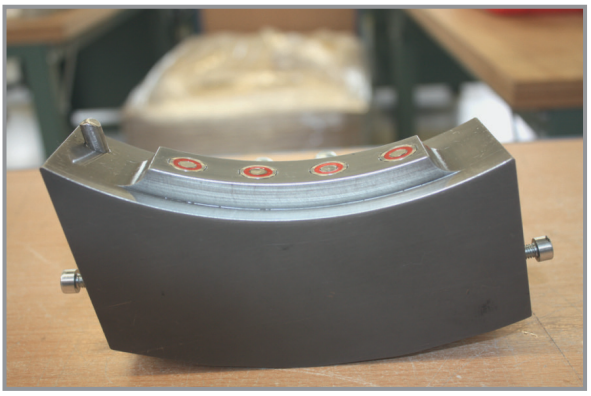

(1) Receiving block with AKM

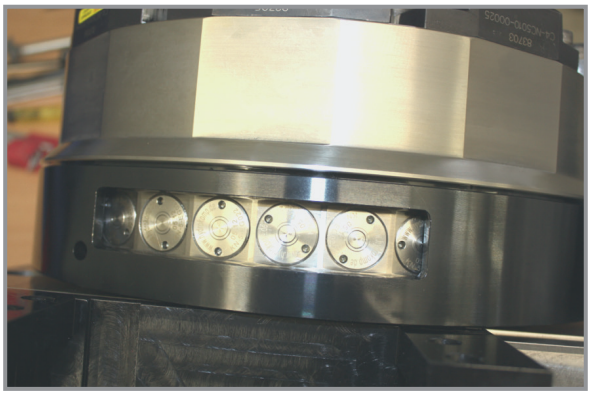

(2) Coupling nipples in the revolver fixture (with a total of 36 coupling nipples)

Screw-in tools for coupling elements

These tools are used to screw the coupling mechanisms and coupling nipples secure into the housing.

The screw-in tool can be driven for example by a cordless screwdriver or wrench.

There are different screw-in tools for coupling mechanisms and coupling nipples available. They differ in their pin layout and various diameters.

Data sheet: 100-5 **Webcode:** 010005

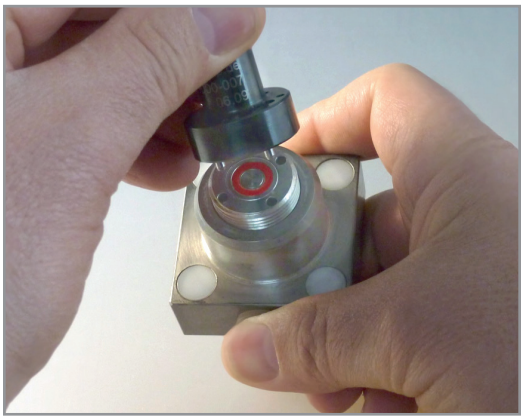

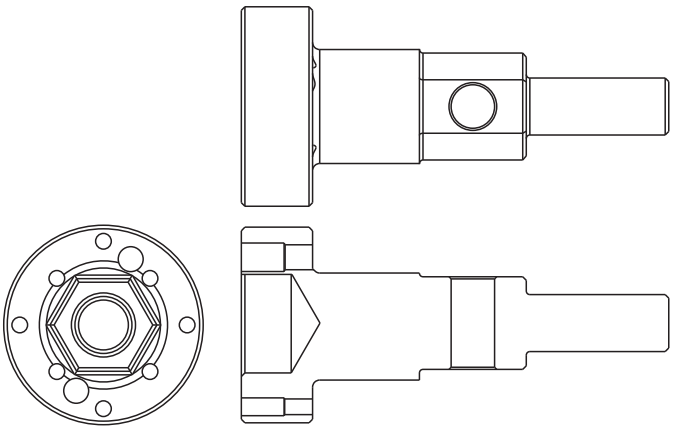

Order numbers:

Screw-in tools

Screw-in tool	Nominal diameter	Coupling element	Order number
for coupling mechanisms	3	KM-3-EG001 KM-3-EG002	9000-057
	5	KM-460-5-EG002 KM-460-5-EG008	9000-007
	8	KM-460-8-EG001 KM-460-8-EG002	9000-058
	12	KM-12-EG001 KM-12-EG002	9000-252
for coupling nipples	3	KN-3-EG001 KN-3-EG002	9000-057
	5	KN-460-5-EG002 KN-460-5-EG003	9000-007
		KN-460-5-EG001 KN-460-5-EG004 KN-460-5-EG006	9000-012
	8	KN-460-8-EG001 KN-460-8-EG002	9000-173
	12	KN-12-EG001 KN-12-EG002	9000-252

Mounting tools

Coupling mechanisms by HYDROKOMP are designed in such a way, that the front system seal can be replaced. This seal is subject to wear out in dailly use as a result of contamination and metal swarf. If the coupling mechanism itself shows no damage, the system seal can be replaced separately.

This can be done by the user or external service personnel. HYDROKOMP has developed a suitable mounting tool to execute the replacement of the system seal simply and safe.

Data sheet: 100-5 **Webcode:** 010005

Replacing the system seal:

Pull out the old damaged system seal from the pilot groove with a scriber.

Insert the new system seal into the peak of the mounting tool manually and set the tool to position above the coupling mechanism.

By manual pressure insert the system seal exactly and in correct bearing position into the axially groove of the coupling mechanism.

The replacement is simple to handle and can be done in only a few minutes to make the coupling mechanism ready for the next use.

Order numbers:

Mounting tools

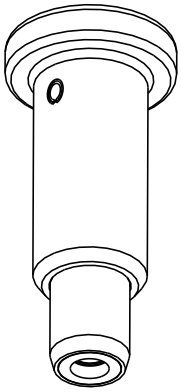

Accessory	Special feature	Order number
Mounting tool	for coupling mechanisms (KM), ND 3	**9000-011**
	for coupling mechanisms (KM), ND 5	**9000-010**
	for coupling mechanisms (KM), ND 8	**9000-013**
	for coupling mechanisms (KM), ND 12	**by request**
	(Packaging unit system seal: 10 pcs)	
System seal	for KM, ND 3, red, depressurized coupling	**D-3-001**
	for KM, ND 3, yellow, pressurized coupling	**D-3-002**
	for KM, ND 5, red, depressurized coupling	**D-460-5-001**
	for KM, ND 5, yellow, pressurized coupling	**D-460-5-002**
	for KM, ND 8, red, depressurized coupling	**D-460-8-001**
	for KM, ND 8, yellow, pressurized coupling	**D-460-8-002**
	for KM, ND 12, red, depressuized coupling	**D-12-001**
	for KM, ND 12, yellow, pressurized coupling	**D-12-002**

Mounting tool for diameter nominal (DN) 12 on request.

HYDROKOMP®

Hydraulische Komponenten GmbH

Technology that connects

Customized solutions for maximum productivity

HYDROKOMP
Hydraulische Komponenten GmbH

Advice, customer service and technical support

For further detailed information in reference to our **products, services and special designs, for advice and in case of technical questions,** our application engineers and development engineers will be pleased to support you.

Get in touch with us!

Monday - Friday
07:00 - 16:00

+49 6401 225999-0

info@hydrokomp.de

Siemenstr. 16
35325 Mücke (Germany)

www.hydrokomp.de

HYDROKOMP Product configurator!

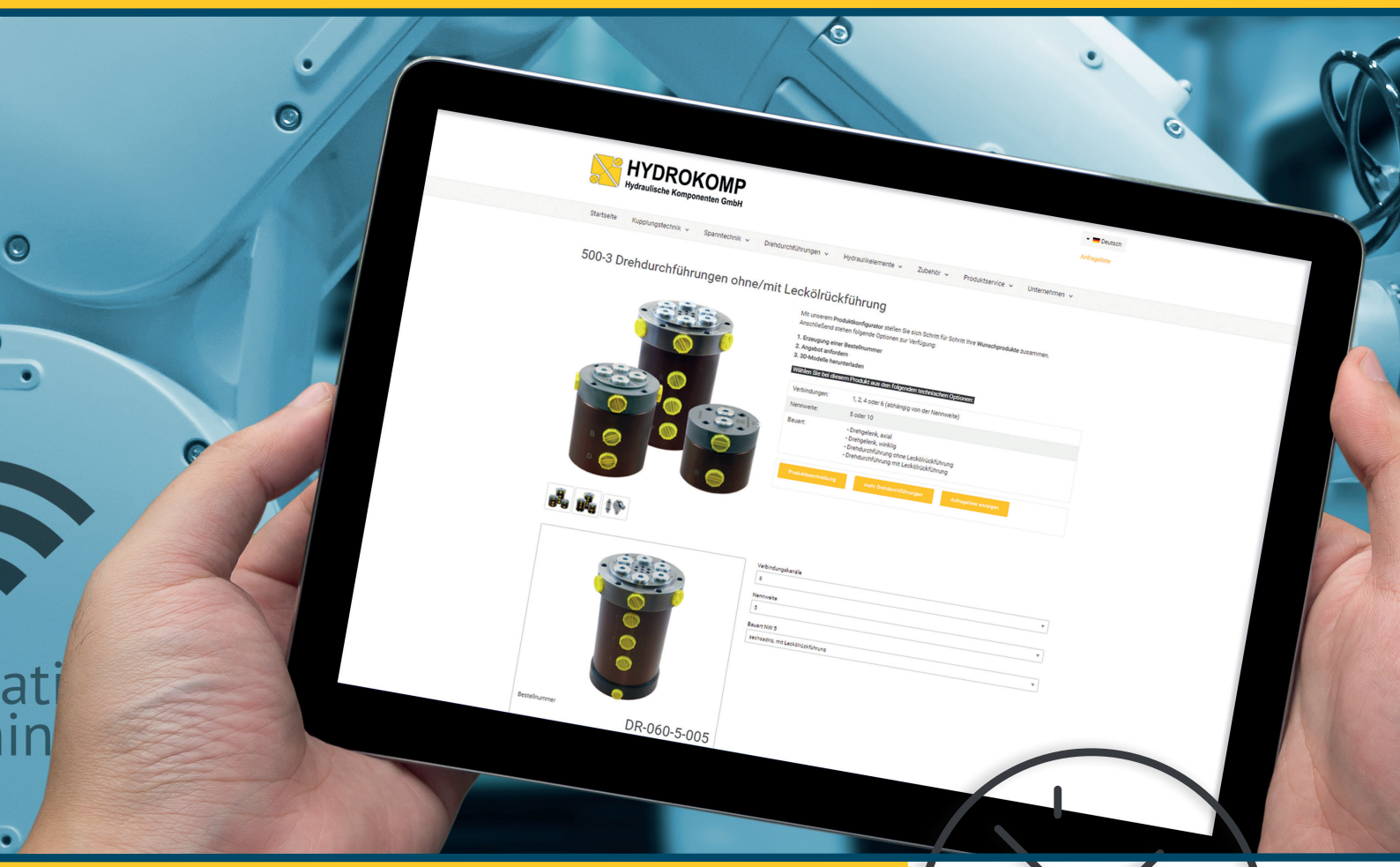

Customize your HYDROKOMP product by yourself online!

24/7

With just a few mouse clicks to the perfect individual solution:

Our web-based **Product configurator** allows you to choose many product variations and adapt it to your specific needs. Our extensive **Product customization** enables you to find the perfect individual solution for your project.

Select HYDROKOMP products at www.hydrokomp.de

Call up the HYDROKOMP Product configurator and customise products individually.

Get order number, send inquiry and download 3D models. Price and delivery dates will be sent to you.

HYDROKOMP®
Hydraulische Komponenten GmbH
Technology that connects

For customized modifications and special designs we will be pleased to support you.

More than 1,000 products are available at **www.hydrokomp.de**

For customized modifications and special designs we will be pleased to support you.

HYDROKOMP
Hydraulische Komponenten GmbH

+49 6401 225999-0
+49 6401 225999-50

info@hydrokomp.de
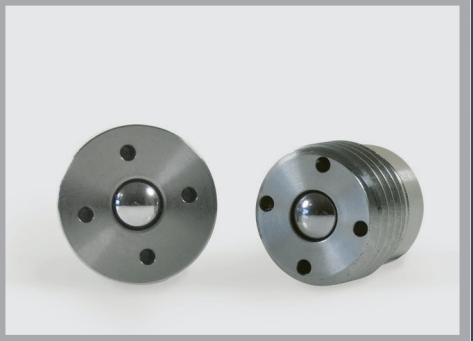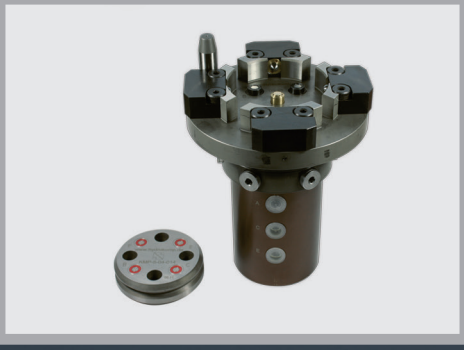
Siemensstraße 16
35325 Mücke
(Germany)